Power Core | EQ-Core

SK 060 - EQ 50.0/ 32.0/ 25.0

- Size(mm) C
- Size(mm) B
- Size(mm) A
- EQ type core
- Permeability(μe)
- Material Mix No

SinoMag. Material Mix No
SS:Sendust Cores
SK:FeSi Cores

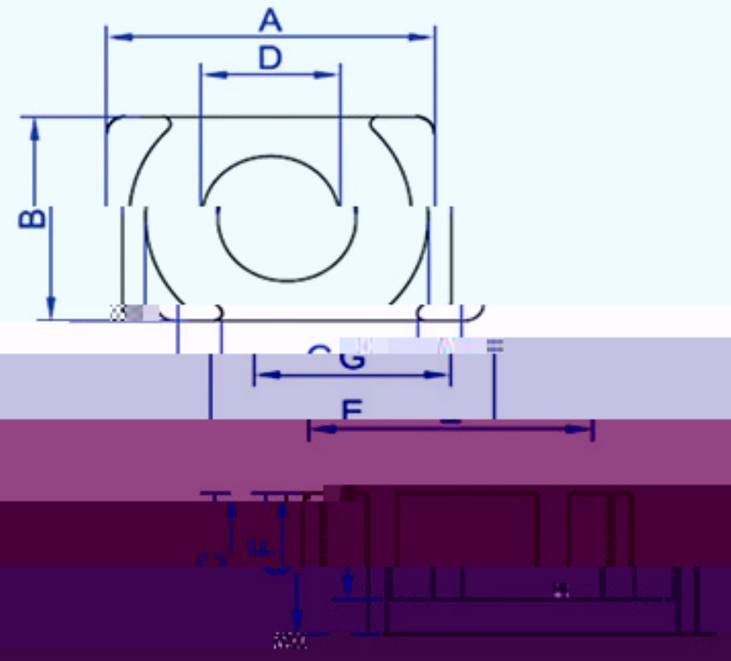

物理参数Physical Parameter

P/N	A (mm)	B (mm)	C (mm)	D (mm)	E (mm)	F (mm)	G (mm)	Le (mm)	Ae (mm^2)	Ve (mm^3)	A_L ±10%
SK060-EQ50.0/32.0/25.0-125-SS	50.0	32.0	25.0	37.5	12.5	25.0	30.0	120	150	18000	1250
SK060-EQ50.0/32.0/25.0-160-SS	50.0	32.0	25.0	37.5	12.5	25.0	30.0	120	150	18000	1600
SK060-EQ50.0/32.0/25.0-200-SS	50.0	32.0	25.0	37.5	12.5	25.0	30.0	120	150	18000	2000
SK060-EQ50.0/32.0/25.0-250-SS	50.0	32.0	25.0	37.5	12.5	25.0	30.0	120	150	18000	2500
SK060-EQ50.0/32.0/25.0-315-SS	50.0	32.0	25.0	37.5	12.5	25.0	30.0	120	150	18000	3150
SK060-EQ50.0/32.0/25.0-375-SS	50.0	32.0	25.0	37.5	12.5	25.0	30.0	120	150	18000	3750
SK060-EQ50.0/32.0/25.0-450-SS	50.0	32.0	25.0	37.5	12.5	25.0	30.0	120	150	18000	4500
SK060-EQ50.0/32.0/25.0-550-SS	50.0	32.0	25.0	37.5	12.5	25.0	30.0	120	150	18000	5500
SK060-EQ50.0/32.0/25.0-750-SS	50.0	32.0	25.0	37.5	12.5	25.0	30.0	120	150	18000	7500
SK060-EQ50.0/32.0/25.0-900-SS	50.0	32.0	25.0	37.5	12.5	25.0	30.0	120	150	18000	9000