Power Core | EQ-Core

SK 060 - EQ 50.0/ 32.0/ 25.0

- Size(mm) C
- Size(mm) B
- Size(mm) A
- EQ type/core
- Permeability(μe)
- Material Mix No.

SinoMag. Material Mix No

SS:Sendust Cores

SK:FeSi Cores

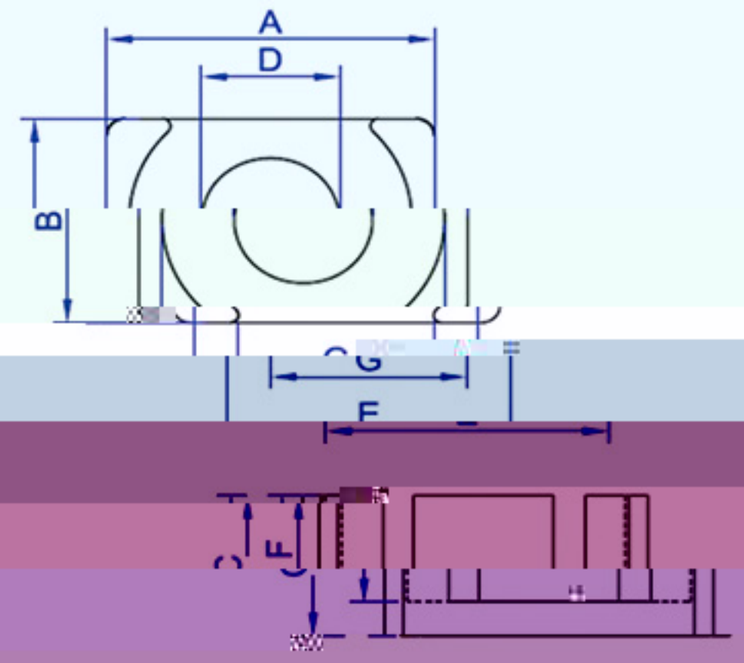

物理参数Physical Parameters

P/N	A (mm)	B (mm)	C (mm)	D (mm)	E (mm)	F (mm)	G (mm)	Le (mm)	Ae (mm²)	Ve (mm³)	A_L ±10%
μ60											
	27.5	115.2	199.7	23005.4	57	87	131				
EQ50.0/32.0/25.0	50.0	32.0	25.0	20.0							
	44.0	19.5	33.9	133.4	314.1	41900.9		118.7	178.1		