Power Core | EQ-Core

SK 060 - EQ 50.0/ 32.0/ 25.0

- Size(mm) C
- Size(mm) B
- Size(mm) A
- EQ type core
- Permeability(μe)
- Material Mix No.

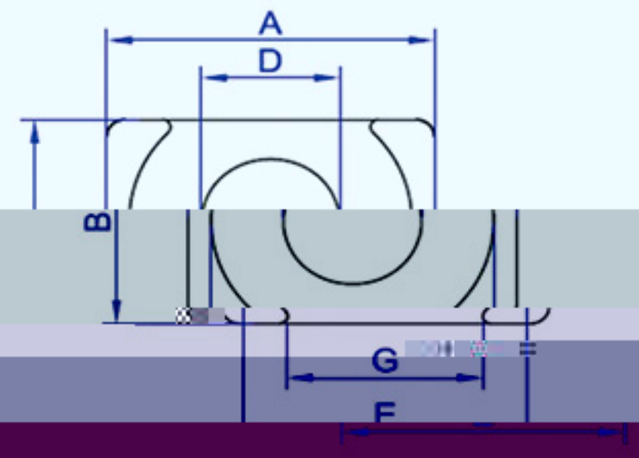

P/N	A (mm)	B (mm)	C (mm)	D (mm)	E (mm)	F (mm)	G (mm)	Le (mm)	Ae (mm²)	Ve (mm³)	A_L ±10%
											μ40 μ60